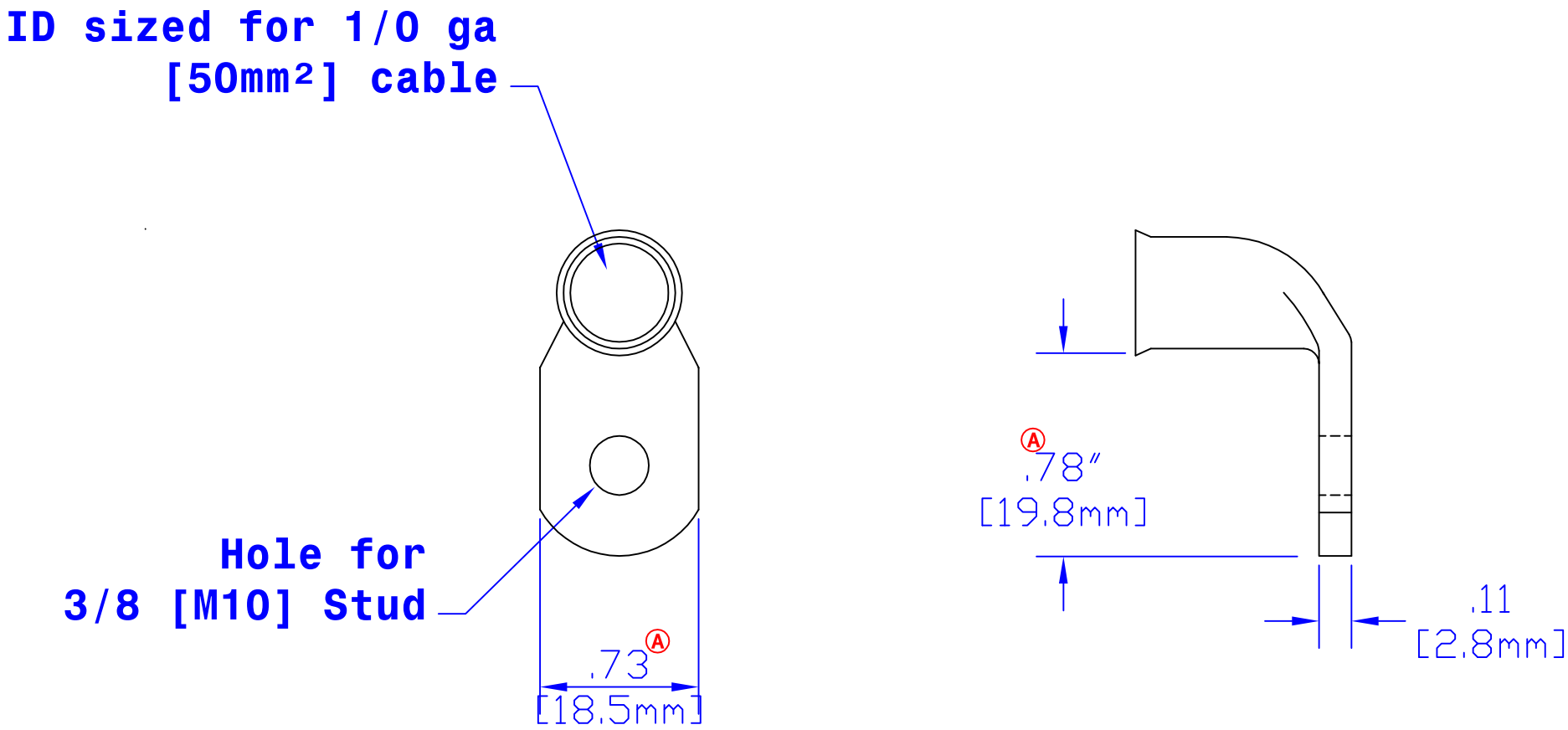

Rev	Date	ECN#	By	Description
A	3-18-04	718	JMH	Change width and length dim.

Drawn By	Date	Checked By	Scale
Jim H	7-24-03	Paul	None

Tolerances, unless otherwise noted
All dimensions are ref only

Property of
QUICK CABLE
3700 Quick Dr. Franksville WI

Material & Treatment
100% Copper
Tin plated

TITLE 1/0 ga [50mm² 90° 3/8 [M10]

PART # 5955FL

Drawing # 5955FL-INFO

REV A

Sheet 1 Of 1