Quick Cable Reserves The Right to Alter Product Types, Their Technical Data, Dimensions, Style And Accessories without Prior Notification.

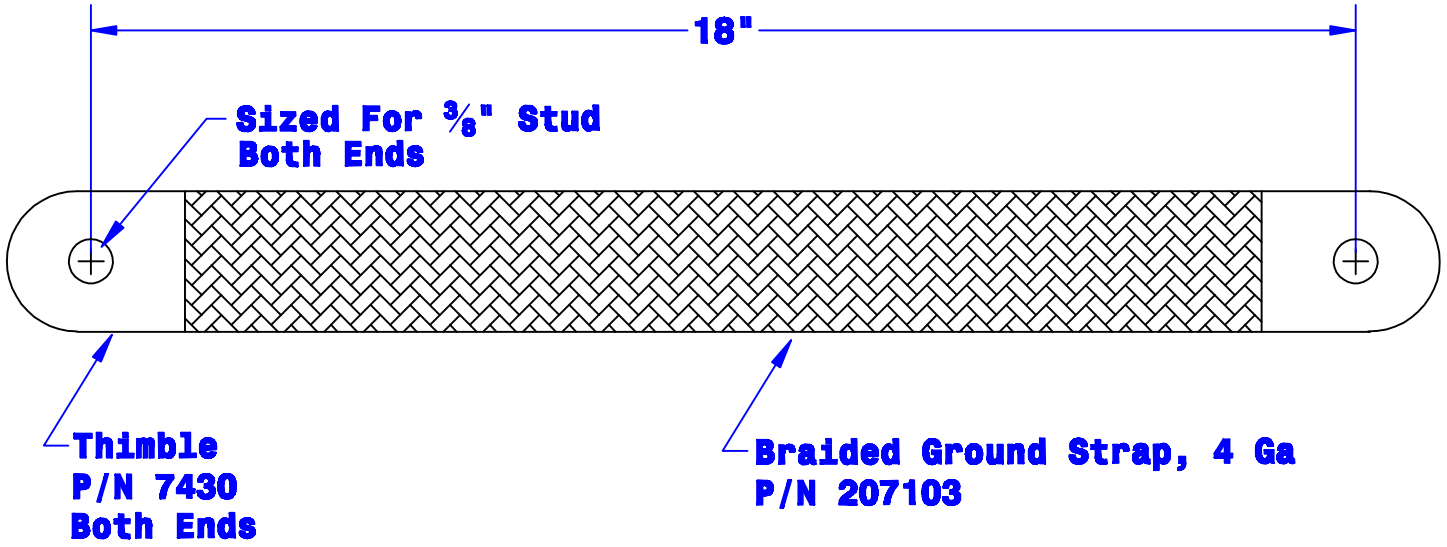

Note: Solder Dip After Punching

RoHs Compliant

DRAFT FOR CUSTOMER APPROVAL

Approved by:_____ **Date:**_____

Property of
QUICKCABLE
3700 Quick Drive
Franksville, WI 53126
U.S.A.
www.quickcable.com

TITLE: Lug to Lug Braided Ground Strap

PART #: 7404

Confidential and Proprietary Information

Rev	Date	ECN#	By	Description

Drawn By	Date	Checked By	Scale
Jim H	08-17-11	Mike E	None

Tolerances, unless otherwise noted: Length to be ± ½"

Material & Treatment

Drawing #: 7404-Info

REV:

Sheet 1 of 1