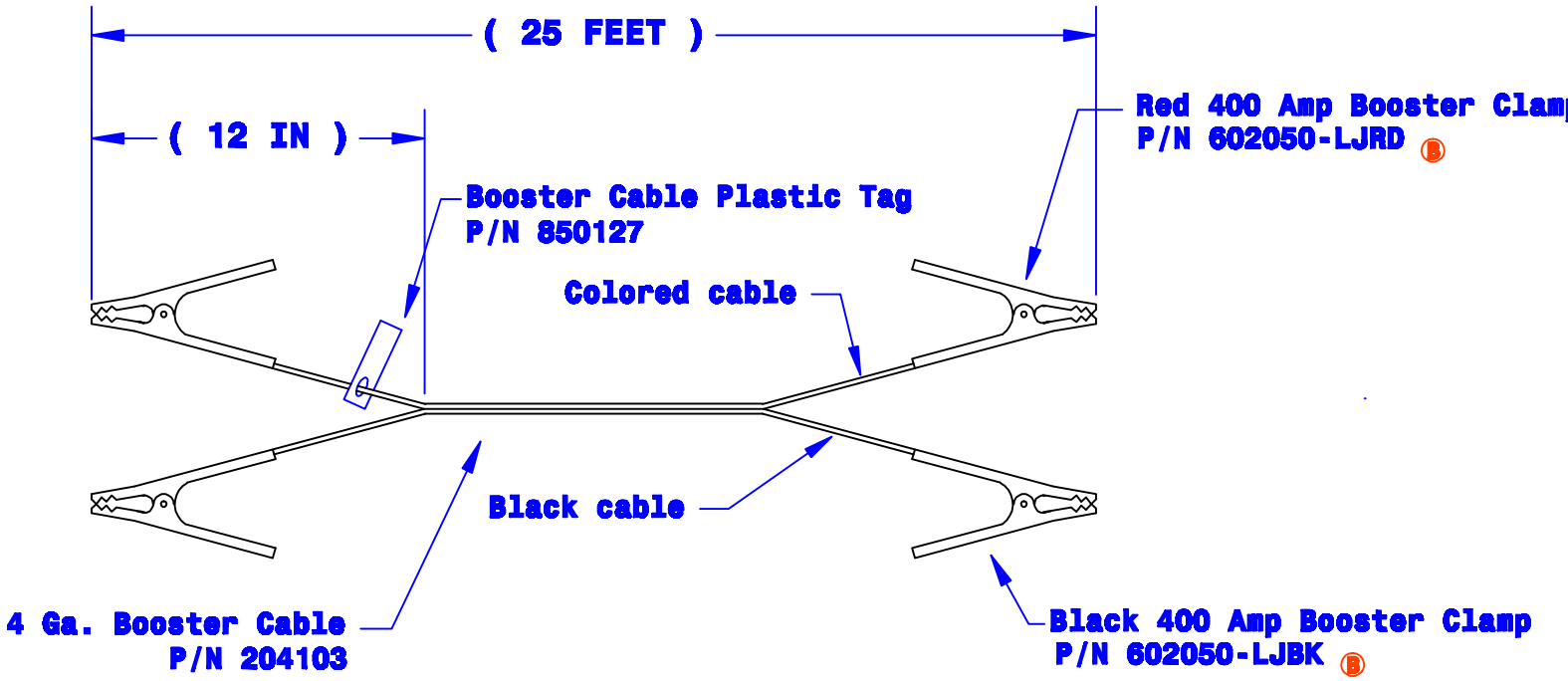

Rev	Date	ECN#	By	Description
B	2-02-07	1410	JMH	Was P/N 8501208 & R
A	2-21-03		Paul	Redraw and add tag

Drawn By: Jim H | Date: 2-21-03 | Checked By: Mike E | Scale: None

Tolerances, unless otherwise noted: Length to be +/- 2"

Material & Treatment: Duplex Cable, Yel/Blk
Clamps: 400 Amp

Property of
QUICK CABLE
3700 Quick Drive
Frankeville, WI 53126
U.S.A.
www.quickcable.com

TITLE: Booster Cable Assy 4 Ga., 25 Ft.

PART #: 602220

Confidential and Proprietary Information

Drawing #: 602220-Info

REV: B

Sheet 1 of 1