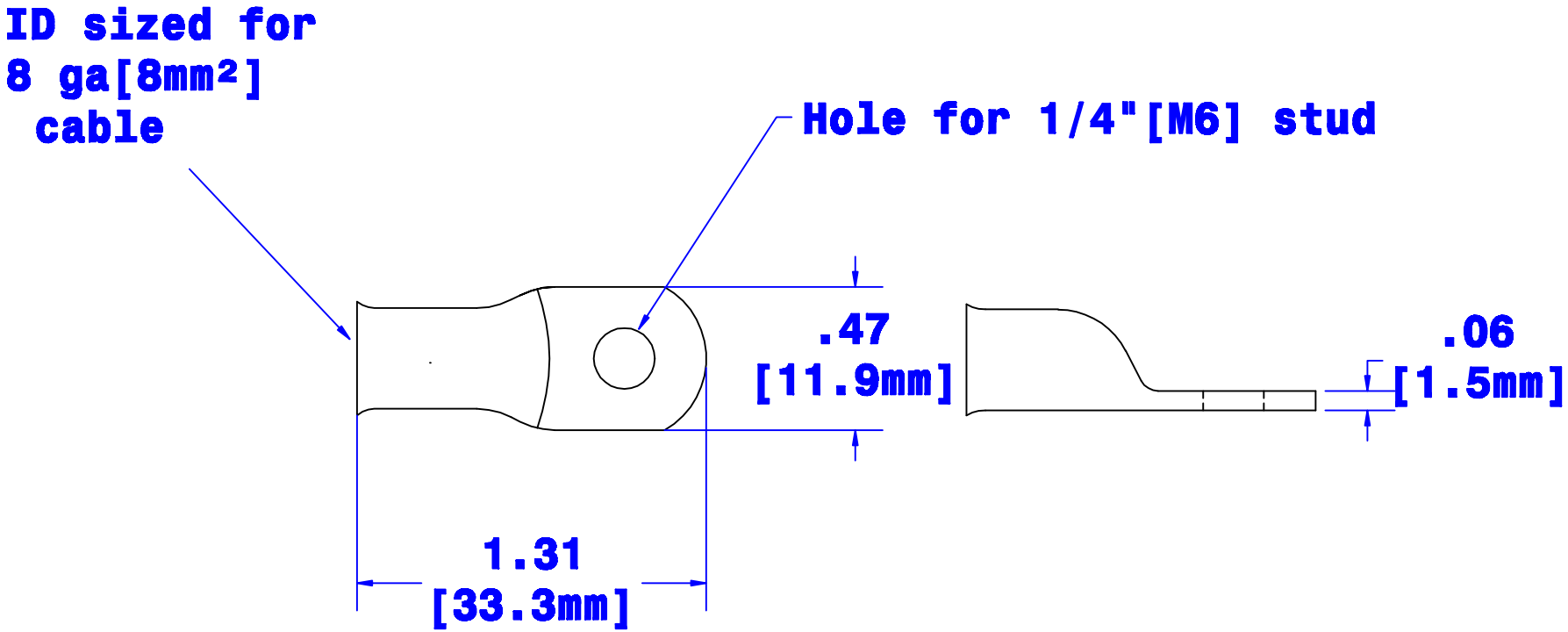

Rev	Date	By	Description

Drawn By	Date	Checked By	Scale
Paul	7/11/03	Jim H	None

Tolerances, unless otherwise noted
All dimensions are ref only

Property of
QUICK CABLE
3700 Quick Dr. Franksville WI

Material & Treatment
100% Copper
Tin plated

TITLE
8 ga[8mm²] MAX LUG
straight 1/4"[M6]stud

PART #
5950D

Drawing #
5950D-INFO

REV

Sheet 1 Of 1